CUBA BASIN SET

Congratulations for purchasing this quality Ewing Tapware Range
Our product is manufactured to the highest quality under strict quality control procedures.

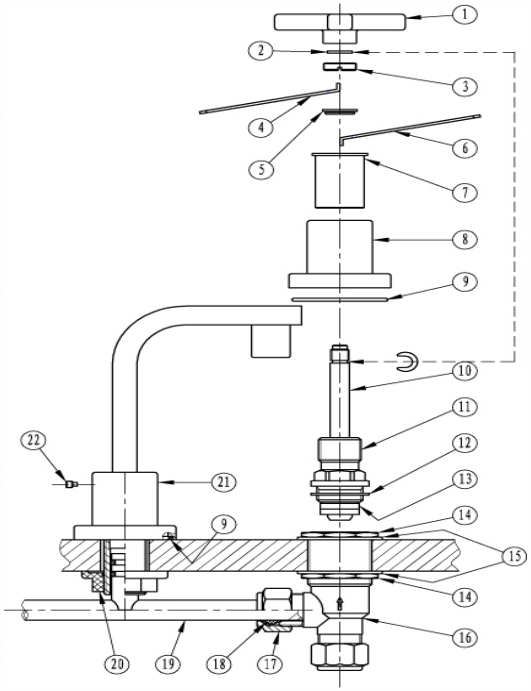

1. Handle
2. Retaining Clip
3. Retaining Nut
4. Spanner
5. Indicator Cap
6. Spanner
7. Flange Barrel
8. Flange
9. Seal
10. Spindle
11. Basin Spindle
12. Fiber Washer
13. Jumper Valve
14. Basin Body Nut
15. Basin Body Washer
16. Basin Body
17. Nylon Olive
18. Kinco Nut
19. Basin Tee Piece
20. Back Nut
21. Basin Spout (outlet)
22. Grub Screw

Installation Instructions.

All pipe work must be thoroughly flushed prior to installation, as foreign materials may block the flow-regulating device and reduce the flow of water.

Please follow these instructions:

1) Measure centre distance between the Basin Body holes in the bench top. Cut the Basin Tee Piece (19) to the required length.
2) Install the Basin Spout (21) Remembering the Dress Ring if supplied, Lock into position by tightening the backing nut (20)
3) Fit Kinco Nuts (18) and Nylon Olives (17) to each end of the Basin Tee (19) Connect to the Basin Bodies (16) tighten nuts slightly.
4) Fit Basin Body Nuts (14) and one Basin Body Washer (15) to each Basin Body.
5) Install the Basin Assembly into the Basin Top; ensure the O-Rings on the Basin Tee are not damaged as they enter the Tail of the Spout (21) Fit remaining Basin Body washer (15) and Basin Body Nut (14) to each Basin Body (16). Make sure the Basin Bodies protrude around 5mm from the basin top/bench top. Tighten all Nuts
6) Screw the Basin Spindles/Tap Head (11) into the Basin Body (16) and tighten making sure the jumper valve (13) and fiber (12) washer are in place (as shown).
7) Place the Flange (8) over the Basin Spindle (11) Screw the Flange Barrel (7) onto the Spindle (11) and tighten with the Spanner (6) Slide Indicator Cap (5) over the Spindle (11) and push into the Flange Barrel (7)
8) Fitting the Handle, Place retaining nut (3) over the Basin Spindle (11) with the slot facing down. Place Retaining Clip (2) into the grove on the Basin Spindle (11). Fit handle (1) onto the Basin Spindle (11) Screw Retaining Nut (3) into the bottom of the Handle (1) and tighten with Spanner (4)
9) Ensure that the HOT Button has been installed on the Left side of the Spout (19) from the users position.
10) Double check that all connections have been tightened.

For after Sales and Service in Australia
Phone: 1800 135 906
Fax: 07 3205 6905
PLEASE RETAIN YOUR PROOF OF PURCHASE

Warranty.

Thank you for choosing a quality Ewing Product that is manufactured to Australian Standards Requirements. Ewing Tapware (where applicable) has been rated under the Water Efficiency Labelling Scheme (WELS), our WELS licence number is 0037.

Technical Information

- Hot and Cold water inlet pressures should be equal.
- Inlet pressure must not exceed 500kPa.
- Minimum operating pressure of 150kPa is required.
- Maximum hot water temperature 80 degrees Celsius.
- Not suitable for gravity feed systems

Terms and Conditions.

Ewing Industries undertakes to repair, or at its option replace only, any product, which is defective through faulty workmanship or materials within 12 months of the purchase of the goods. The warranty period commences from the date of purchase. Ewing Industries reserves the right to provide components as 'parts only' to the customer. This warranty is only applicable for products purchased from an authorised Ewing Industries reseller. The labour component of the warranty does not cover excessive time taken to access or remove the product from its installed location. The warranty is limited to Ewing Industries products only and does not cover other manufactures products, which may be attached to Ewing Industries products.

Warranty may be void due to the following reasons :-

- Inability to provide proof of purchase.
- Products are not installed by a licensed plumber or in accordance with relevant industry standards or regulations.
- The product is exposed to water pressures that are greater than 500kPa and temperatures exceed 80 degrees Celsius.
- Products used for incorrect applications and in inappropriate locations.
- Products are cleaned with anything other than a soft cloth soaked with warm water. The use of abrasive cleaners or harsh detergents may void the warranty

Care and Cleaning.

Clean regularly with warm water and a soft cloth
Do not use abrasive cleaners or harsh detergents.